COLT OPTICS®

MRS-1

USER MANUAL

ENGLISH **(EN)**

Choosing the right optic is more than a gear decision. It affects your performance, your confidence, and, in critical moments, your safety. When you rely on your equipment in demanding environments, you need optics that work without hesitation. Too many products are built for specifications and marketing claims instead of real-world use. That leads to complexity, inconsistency, and failure when conditions are least forgiving. Colt Optics was built to solve that problem. By listening to shooters in the field and studying how optics perform under stress, we design products that prioritize clarity, durability, and simplicity. Every component is engineered to hold zero, resist impact, and deliver dependable performance in harsh conditions. The result is an optic you can trust when it matters most.

Engineered for Real-World Performance

Every Colt Optics product is developed by engineers and industry professionals with hands-on experience in tactical and field environments. Our focus is simple: help you acquire targets faster, identify them more clearly, and maintain confidence in your equipment under pressure. Through

advanced modeling and extensive testing, our optics deliver sharp resolution across the entire field of view, reliable eye relief and forgiving exit pupil, consistent performance from any shooting position, and fast, accurate target acquisition in low light and high stress. This means less time adjusting and more time focusing on the task at hand.

Precision You Can Rely On

Each lens is designed with exact curvature and precise centering, then manufactured from premium optical glass and treated with advanced coatings for maximum light transmission and contrast. With over 92 percent light transmission, Colt Optics provides clear, detailed images from first light to last. Targets remain distinguishable, reticles remain crisp, and visual fatigue is reduced during extended use. Our optical systems are integrated into rugged mechanical and electronic platforms, assembled under disciplined quality controls, and verified through rigorous testing. Every optic is built to withstand recoil, environmental exposure, and long-term use without loss of performance.

Built for Confidence

Colt Optics products are not designed for display cases. They are built for shooters who depend on their equipment in demanding situations. Whether you are training, competing, hunting, or operating in professional environments, your optic should support your decisions, not complicate them. Our commitment is simple: deliver reliable, precise, and durable optics that help you perform at your best when it matters most.

Colt Optics-Make It Count

TABLE OF CONTENTS

Specifications 6
Overview 7-8
Mounting Your Sight 9
Operation 10-12
- Battery Installation 10
- Illumination Adjustment 11
- Zeroing Your Sight 12

Care and Maintenance 13
Warranty Information 14

WARNING: Read entire manual prior to installing and operating the sight. Make sure firearm is unloaded prior to installation.

COLT OPTICS®

OPTICS BUILT FOR SPEED

- Aspheric Lens Design
- Multi-coated Lenses for Optimal Scratch Resistance and to Minimize Glare and Reflection
- Minimal Blue Tint
- True 1x Magnification
- Maximum Lens Area

READY FOR WHEN AND WHERE IT COUNTS

- Operational Range (-20°F to 160°F) (-29°C to 70°C)
- Recoil rated to MIL-STD
- Fully Enclosed
- 10 Minute Automatic Shutoff with Motion Activation

TAILORED ERGONOMICS

- Intuitive Push Button Design
- Oversized Buttons Optimized for Gloved Use
- Predictable, Tactile, and Audible Click Values

MRS-1 SPECIFICATIONS

Magnification	**1X**
Reticle(s)	**3 MOA Dot Only**
Reticle Illumination Color	**Bright Red**
Battery Type	**CR2032**
Battery Life Middle Setting (hrs)	**75,000**
Illumination Settings	**12 Settings (8 Daylight, 4 NV)**
Eye Relief (mm) (in)	**Unlimited**
Elevation Adjustment Value Per Click (MOA)	**1 MOA**
Windage Adjustment Value Per Click (MOA)	**1 MOA**
Total Internal Travel Elevation (MOA)	**70 MOA**
Total Internal Travel Windage (MOA)	**70 MOA**
Mounting Footprint	**Acro**
Weight w/ Battery (oz)	**2.0**
Length (mm) (in)	**(47) (1.85)**
Width (mm) (in)	**(32.9) (1.29)**
Height (mm) (in)	**(31.6) (1.24)**

OVERVIEW

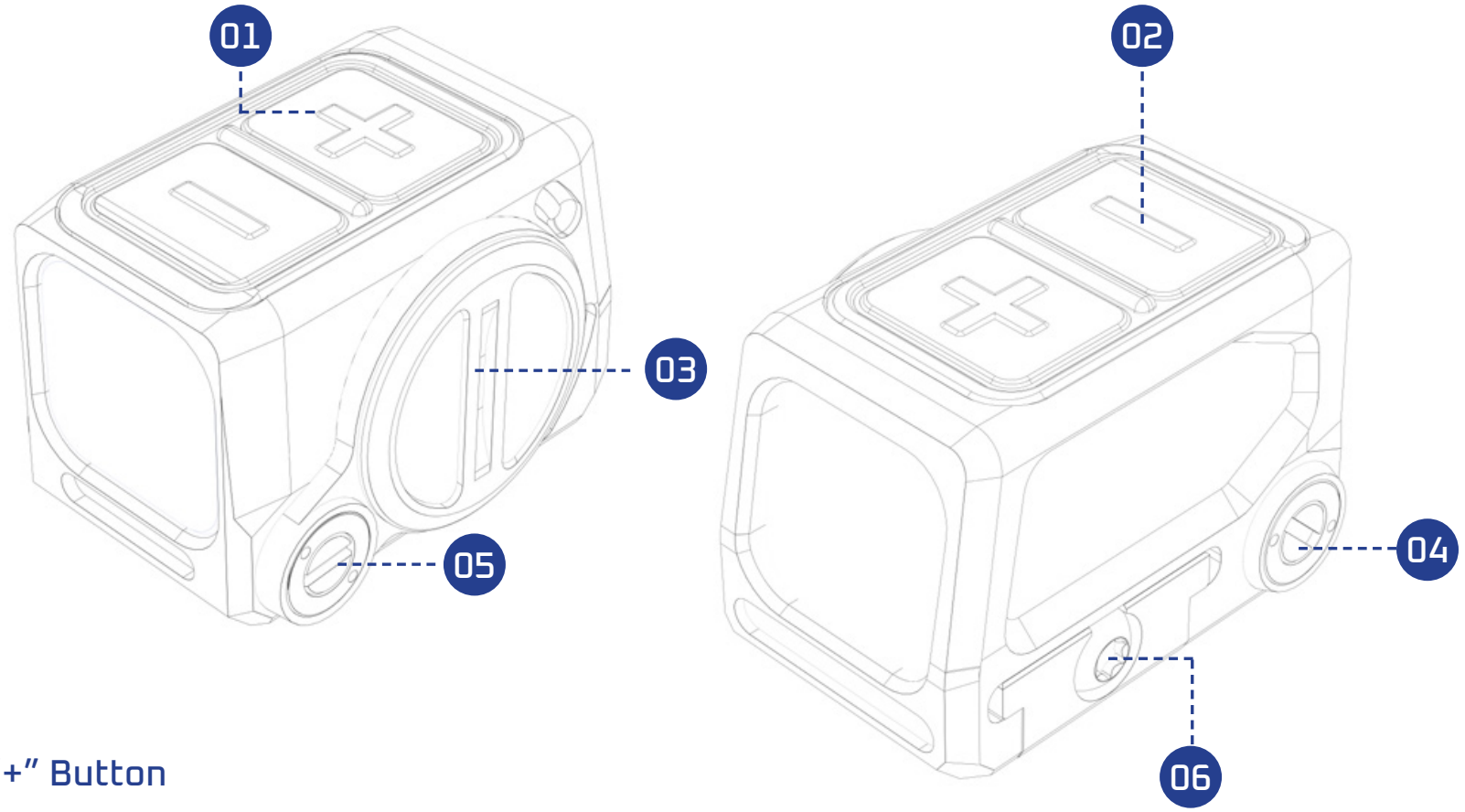

01 “+” Button

02 “-” Button

03 Battery Cap

04 Elevation Turret

05 Windage Turret

06 Cross Bolt

06 CR2032 Battery (Included)

07 Mounting Tool (Included)

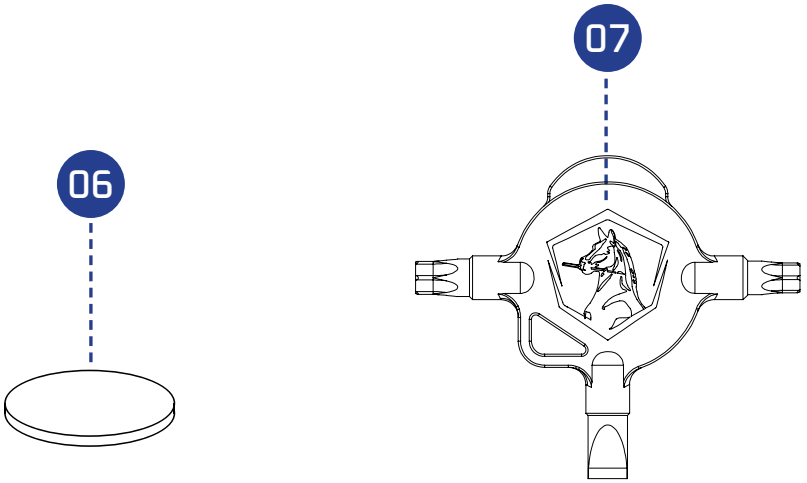

⚠ WARNING

- **INGESTION HAZARD: DEATH** or serious injury can occur if ingested.
- A swallowed button cell or coin battery can cause **Internal Chemical Burns** in as little as **2 hours**
- KEEP new and used batteries **OUT OF REACH OF CHILDREN**
- **Seek immediate medical attention** if a battery is suspected to be swallowed or inserted inside any part of the body.
- For treatment information call: [phone number for the National Battery Ingestion Hotline, currently 1-(800) 498-8666].

MOUNTING YOUR SIGHT

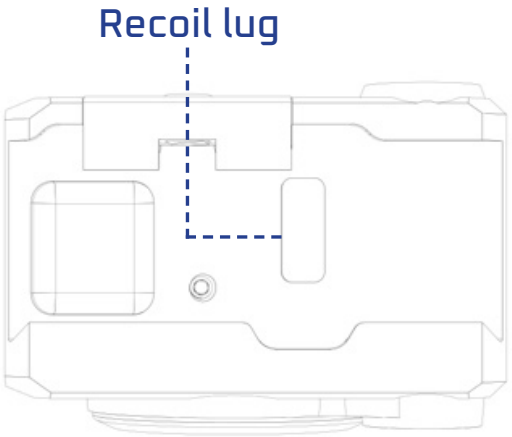

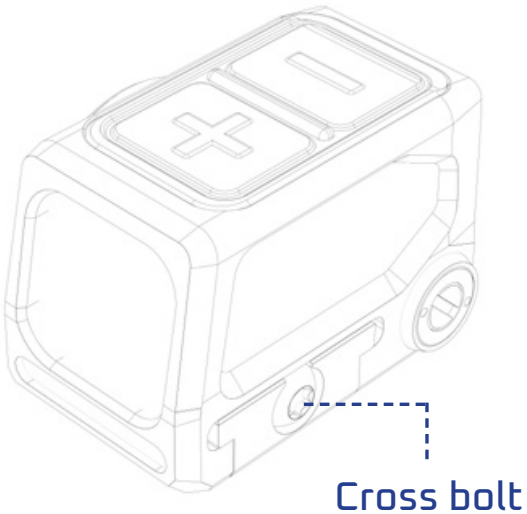

MOUNTING TO YOUR FIREARM

The MRS-1 uses the Acro standard footprint and will work on any pistol or mount that is cut for that footprint.

To install the sight, position the optic on the firearm or mounting plate and push the sight forward until it comes to a stop against front surface of recoil lug. Tighten the cross bolt down enough to hold it in place. Then, come back and apply 25-30 in-lbs of torque to the cross bolt. Do not over tighten. After tightening, check to make sure the sight does not move. The optic is now ready to be zeroed.

WARNING: Read entire manual prior to installing and operating the sight.
Make sure firearm is unloaded prior to installation.

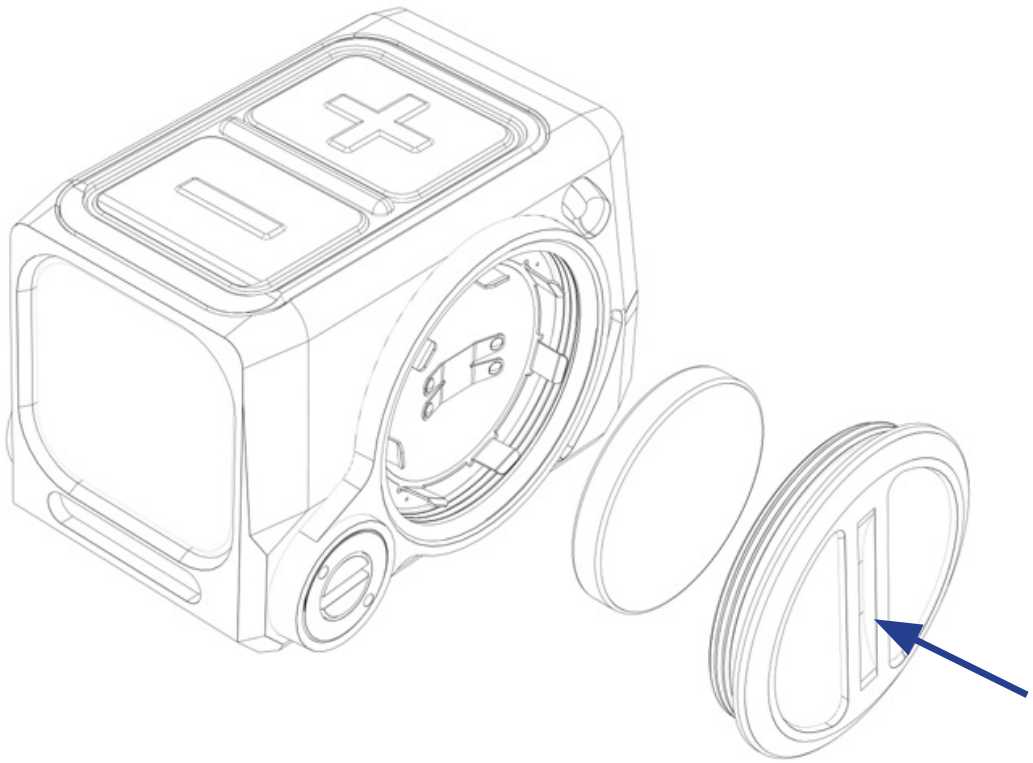

BATTERY INSTALLATION

Turn the outer-most cap counterclockwise to access the battery compartment. With the "+" side facing outward, insert the CR2032 battery into the battery compartment until it is fully seated and captured by the metallic contacts. Reinstall the battery cap until snug.

WARNING: Read entire manual prior to installing and operating the sight. Make sure firearm is unloaded prior to installation.

ILLUMINATION ADJUSTMENT AND SETTINGS

The MRS-1 can be operated to perform any of its functionalities by following the chart below.

ACTION	RESULT	NOTIFICATION
+ Short Press	› Turn sight on › Increase brightness	› Blink twice if at max day setting
— Short Press	› Decrease brightness	› Blink twice if at min NV setting
Press + and — for 1.25 seconds	› Turn sight off	
— Press for 10 seconds	› Enable or disable motion activation	› 2 flashes indicates motion activation is disabled, auto-off is disabled › 5 flashes indicates motion activation is enabled, auto-off is enabled

Automatic Shutoff with Motion Activation

The MRS-1 is equipped with motion activation. This feature is only available when the unit is turned on. By allowing the unit to shut off automatically after 10 minutes, the unit will turn on automatically the next time you pick up your firearm. Turning the unit off manually will disable motion activation.

ZEROING YOUR SIGHT

Your MRS-1 uses 1 MOA per click windage & elevation (W/E) turrets. The laser engraved letters and arrows (U = Up, R = Right) on the body of the sight refer to direction change in point of impact (POI).

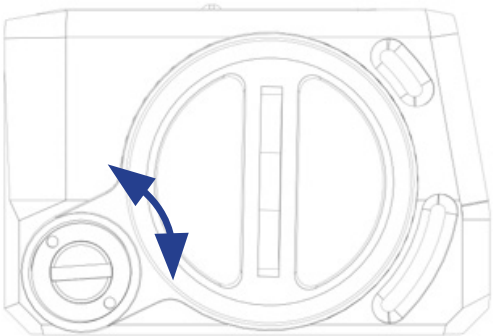

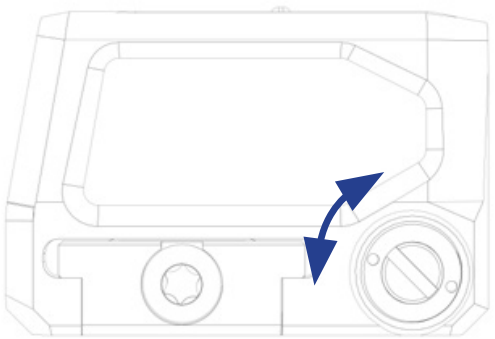

Windage Adjustment:

- To move the Point of Impact (POI) to the right, use the included tool or similar to turn the windage adjustment turret located on the right hand side counter-clockwise.
- To move the POI left, turn the windage adjustment turret clockwise.

Elevation Adjustment:

- To move POI up, use the included tool or similar to turn the elevation adjustment turret located on the left hand side clockwise.
- To move the POI down, turn the elevation adjustment turret counter-clockwise.

If your Point of Impact is the same as your Point of Aim at your specified target, your optic is zeroed.

CARE AND MAINTENANCE

LENSES: To clean lenses, remove any large particles with an optical lens brush. To remove fine particles, use the provided microfiber cloth. If the cloth becomes soiled, wash in lukewarm soapy water and leave to air dry. To further clean the lenses, you may use pure alcohol, high-grade glass cleaner, or distilled water on a cotton swab. To ensure long-lasting high performance, keep lens surfaces free of dirt, oil, grease, etc.

SIGHT BODY: If dirt, dust, fingerprints, etc. accumulate on the sight body, simply wipe the body down with a clean dry cloth. Do not use the included microfiber cloth.

STORAGE: Store your sight in a well-ventilated, dry, and dark place. If the sight is wet, dry the sight prior to storage. If storing for an extended period of time, remove the battery from the sight.

WARRANTY

Colt Optics Lifetime Warranty Statement

Colt Optics stands behind the quality and performance of our optics and accessories. Each optic is backed by a Limited Lifetime Warranty covering mechanical and optical defects in materials and workmanship under normal use for the life of the product. If a covered defect is confirmed after inspection, we will, at our discretion, repair the product at no charge to the original purchaser, or replace it with the same or a comparable model at no charge.

Electronic Components

Integrated electronic components (illumination and control modules) are covered by a limited warranty of two (2) years for professional use and five (5) years for commercial use from the date of purchase, protecting against defects in materials or workmanship.

Warranty Exclusions

The Colt Optics Warranty does not cover loss, theft, deliberate damage or cosmetic damage that does not impact product performance.

COLT OPTICS®

MAKE IT COUNT